LONG SEAM	
COURSE	ORIENTATION
1 (TOP)	180°
2	190°

*VERT - TOP TO BOTTOM

Ship loose items: NONE

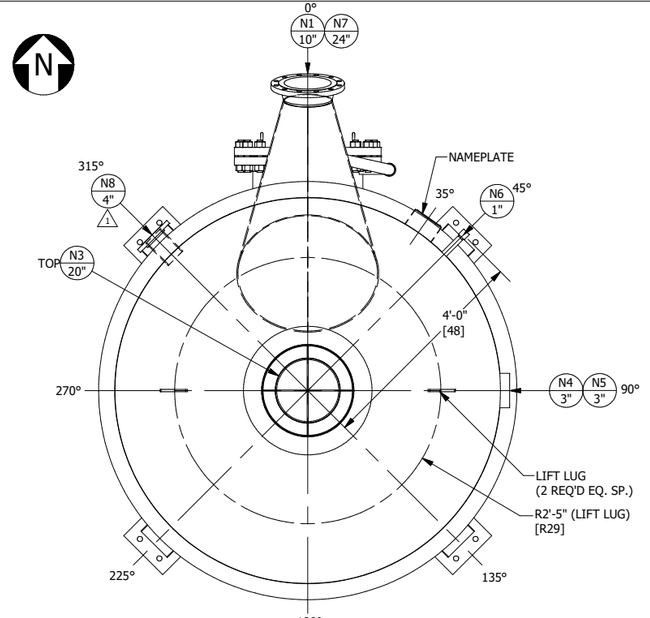

PLAN VIEW
SCALE 1/2" = 1'-0"

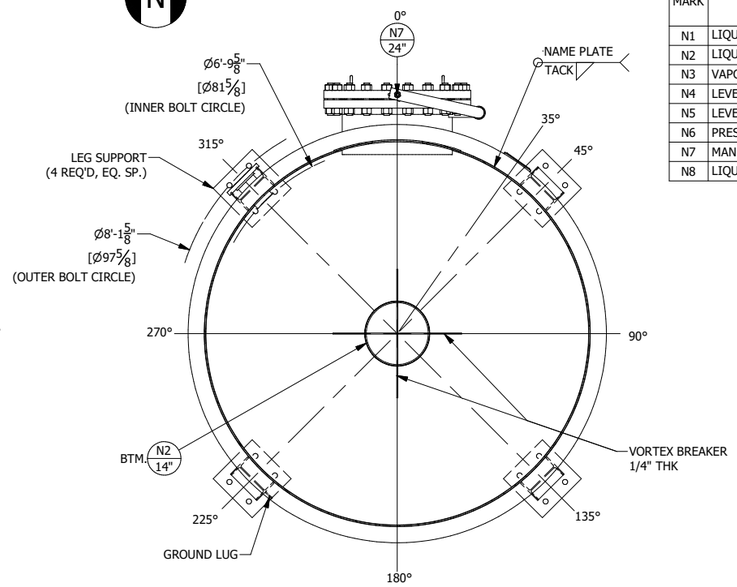

SECTION A-A
SCALE 1/2" = 1'-0"

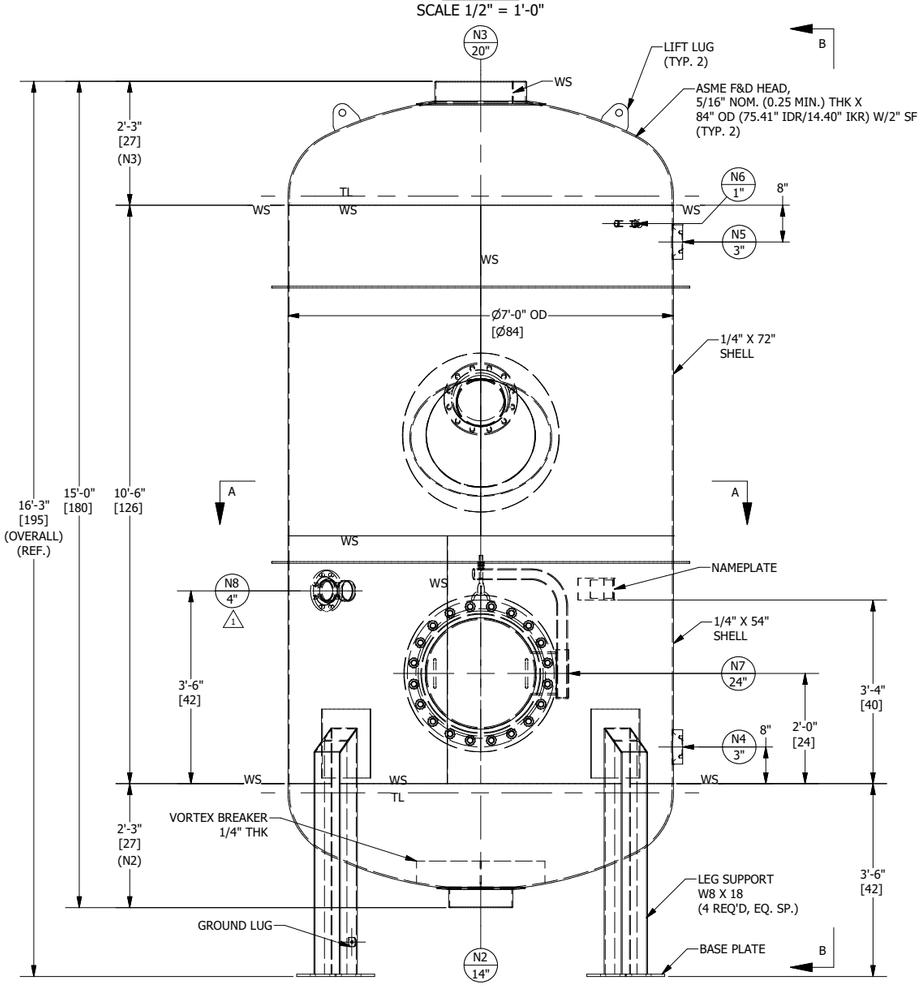

ELEVATION VIEW
SCALE 1/2" = 1'-0"

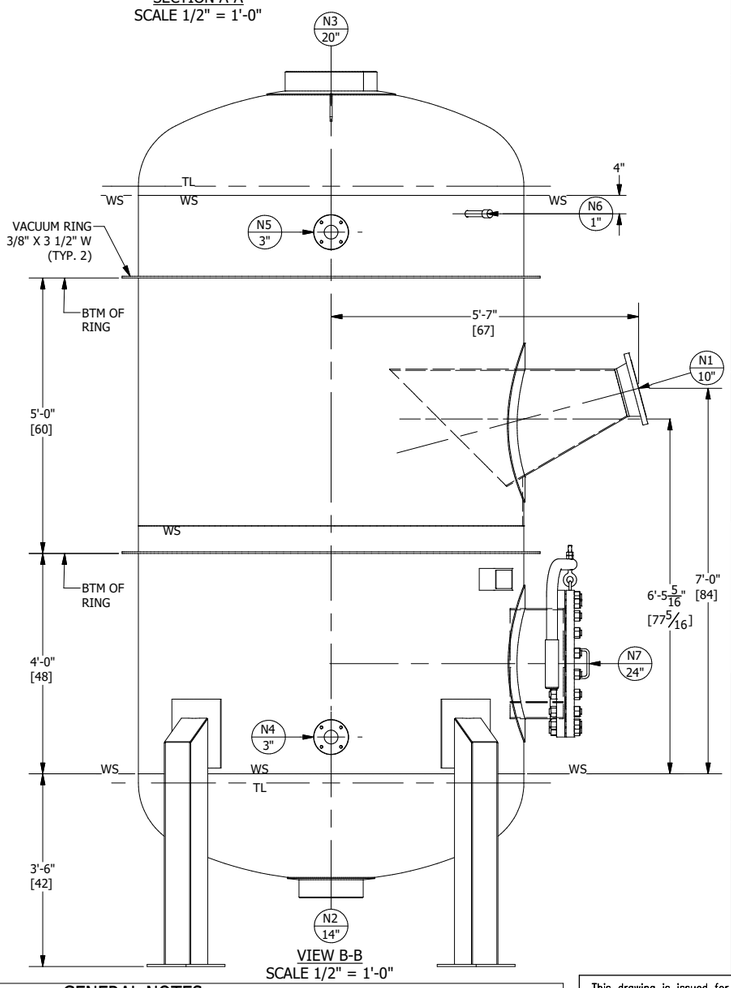

VIEW B-B
SCALE 1/2" = 1'-0"

NOZZLE SCHEDULE

MARK	SERVICE	SIZE	RATING	TYPE/STYLE	NECK SCHED.	PROJ. EXT.(C.L.)	PROJ. INT. (MIN.)	WELD FIGURE	REPAD SIZE (W X THK.)	WELD SIZE "A1"	WELD SIZE "A2"	WELD SIZE "B1"	WELD SIZE "B2"	WELD SIZE "C1"	WELD SIZE "C2"
N1	LIQUOR IN	10"	150#	RFWN	1/4"	SEE DWG	SEE DWG	2,8	5.5" X 1/4"	-	-	1/4	1/8	1/4	3/16
N2	LIQUOR OUT	14"	-	PIPE	10S	SEE DWG	-	5	2.5" X 1/4"	-	-	1/4	1/8	1/4	3/16
N3	VAPOUR OUT	20"	-	ROLLED PLATE	1/4"	SEE DWG	--	5	4" X 1/4"	-	-	1/4	1/8	1/4	3/16
N4	LEVEL TRANSMITTER	3"	150#	FLANGED ADAPTOR	--	--	--	4	-	-	-	1/4	1/8	-	-
N5	LEVEL TRANSMITTER	3"	150#	FLANGED ADAPTOR	--	--	--	4	-	-	-	1/4	1/8	-	-
N6	PRESSURE MEASUREMENT	1"	-	THREADED PIPE NIPPLE WITH CAP	40S	6"	--	4	-	-	-	3/16	1/8	-	-
N7	MANHOLE	24"	150#	RFSO W/ DAVIT	1/4"	9"	1"	1,7	5" X 1/4"	1/4	3/8	1/4	1/8	1/4	3/16
N8	LIQUOR CIRCULATION INLET	4"	150#	RFSO	40S	6"	1"	1,7	-	1/4	3/8	1/4	1/8	-	-

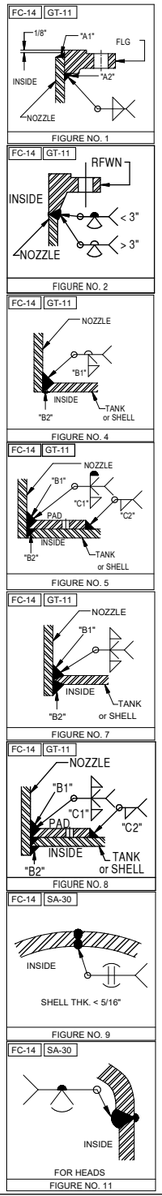

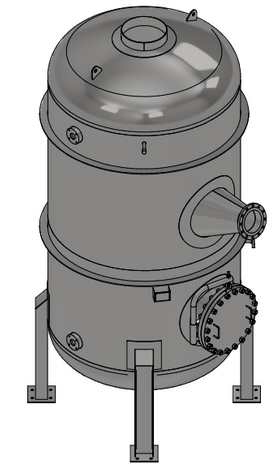

ISO VIEW
SCALE 1/4" = 1'-0"

MATERIALS OF CONSTRUCTION	
	VESSEL
SHELL	SA240-304/304L
HEADS	SA240-304/304L
RIM ANGLE	-
NOZZLE NECKS	SA312-304/304L WLD & SA240-304/304L
NOZZLE FLANGES	SA182F-304/304L
MANWAY NECKS	SA240-304/304L
MANWAY FLANGES	SA182F-304/304L
GASKETS 1	KLINGER TOP CHEM 2003
BOLTS/STUDS	SA193-B7 (ZINC PLATED)
NUTS	SA194-2H (ZINC PLATED)
THREADED PIPE NIPPLE	SA312-304/304L
REPADS	SA240-304/304L
SUPPORTS/HOLD DOWNS	SA36
LIFTING LUGS	SA240-304/304L
VACUUM RINGS	SA240-304/304L
STIFFENER RINGS	-
GROUND LUG	SA240-304/304L
BAFFLE	-
INTERNAL SUPPORT ANGLE	-
STIFFENERS ANGLE	-
THREADED CAP 1	SA182F-304/304L
TANK CLIPS (LADDER)	-
HANDRAIL	-
HANDRAIL CLIPS	-
PLATFORM	-
PLATFORM CLIPS	-
DIPTUBE SUPPORT	-
JACKET SHELL	-
JACKET HEADS	-
JACKET NOZZLE NECKS	-
JACKET NOZZLE FLANGES	-

DESIGN DATA	
-	VESSEL
DESIGN AND FAB. CODE	ASME SECT. VIII, DIV. 1
CERT. STAMP REQ'D.	YES
DESIGN PRESSURE	60 psi / FV
DESIGN TEMPERATURE	308° F
MIN. DESIGN METAL TEMP.	-20° F
OPERATING PRESSURE	-
OPERATING TEMPERATURE	-
JOINT EFFICIENCY HEADS	0.85
JOINT EFFICIENCY SHELL	0.70
CORROSION ALLOWANCE	0"
SPECIFIC GRAVITY	1
EARTHQUAKE ZONE	Ss = (0.16) S1 = (0.078)
WIND LOAD	130 mph
STRESS RELIEF	NOT REQ'D
RADIOGRAPHIC EXAM	NOT REQ'D
DYE PENETRANT EXAM	NOT REQ'D
MAGNETIC PARTICLE EXAM	NOT REQ'D
HYDROSTATIC TEST	83 psi
PNEUMATIC TEST	-
JKT HYDRO TEST	-
JKT DESIGN AND FAB. CODE	-
JKT CERT. STAMP REQ'D.	-
JKT DESIGN PRESSURE	-
JKT DESIGN TEMPERATURE	-
JKT MIN. DESIGN METAL TEMP.	-
JKT OPERATING PRESSURE	-
JKT OPERATING TEMPERATURE	-
JKT JOINT EFFICIENCY HEADS	-
JKT JOINT EFFICIENCY SHELL	-

VESSEL FINISH	VESSEL CAPACITY AND WEIGHTS	
INTERIOR WELD TREATMENT: SAV TANK STANDARD	OPERATING CAPACITY	-
EXTERIOR WELD TREATMENT: SAV TANK STANDARD	FULL CAPACITY	3,800 GAL.
SAV TANK FINISHING STANDARD: SEE NOTE 6	EMPTY SHIPPING WEIGHT	6,000 LBS.
INSULATION: N/A	WEIGHT FULL OF WATER	37,900 LBS.
PAINTING: SEE NOTE-7	WEIGHT FULL OF PRODUCT	37,900 LBS.

ASME SECT. VIII, DIV. 1
2025 EDITION

ENG. _____ DATE: _____

Q.C. _____ DATE: _____

A.I. _____ DATE: _____

GENERAL NOTES

1.) COVER ALL FLANGES, OPENINGS & MACHINED SURFACES PRIOR TO SHIPMENT UNLESS OTHERWISE NOTED.

2.) BOLT HOLES TO STRADDLE 0° & 180° UNLESS OTHERWISE NOTED.

3.) NOZZLE REPADS TO HAVE (1) Ø1/4" TELL-TALE HOLES ON HORIZONTAL CENTER LINE.
ALL OTHER REPADS TO HAVE (1) Ø1/4" WEEP HOLE AT LOWEST POINT ON PAD.

4.) ASME CODE VESSELS TO BE IN ACCORDANCE WITH UG-80 & UG-81.
TOLERANCES: +/- 1/8" FOR DIMENSIONS AND +/- 2 DEGREES FOR ORIENTATIONS.

5.) ASME MATERIALS TO CONFORM TO THE FOLLOWING:
FLANGES - B16.5
FITTINGS - B16.9 & COUPLINGS - B16.11.

6.) PICKLE ALL EXTERIOR WELDS. PASSIVATE INTERIOR & EXTERIOR OF VESSEL.

7.) PAINTING-
CARBON STEEL LEGS TO BE SANDBLASTED SP6 AND PAINTED (1) COAT MACROPOXY 646 GRAY @5-7 MILS DFT.

This drawing is issued for customer approval. please review, make approval changes (if any) in red. check the appropriate box, sign & date.

- [ ] Approval – no changes. Please proceed with fabrication.
- [ ] Approved as noted. Please proceed with fabrication
- [ ] Not approved. Please make changes and resubmit.

Customer signature _____ Date _____

REV	D.BY	C.BY	DATE	DESCRIPTION
1	SS	AD	03-24-26	CERTIFIED
0	SS	AD	03-02-26	APPROVAL

REVISIONS

Savannah Tank & Equipment Corp.
1517 Telfair Road, Savannah, GA 31415
(912) 233-8902

DRAWN BY: SS
CHK'D BY: AD
APPROVED BY: HP
SCALE: 1/2" = 1'-0"

Andritz
Wash Liquor Flash Tank
EQUIP. –
CUST. PO #4504908554

DRAWING NO.: 022-26-1 SHT 1 OF 4 REV. SET 0

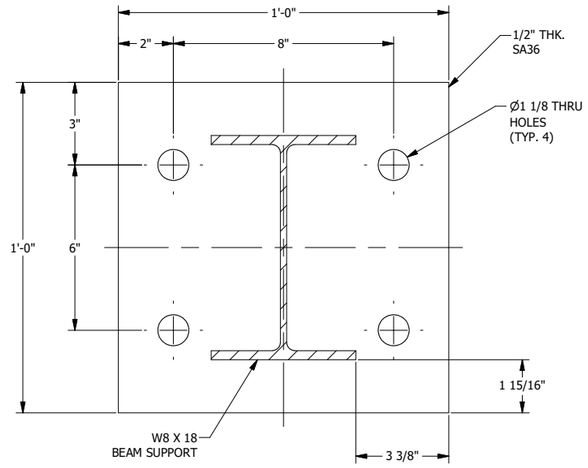

TYP. BASE PLATE DETAIL (4 REQ'D)
SECTION D-D
SCALE 3" = 1'-0"

FC-39

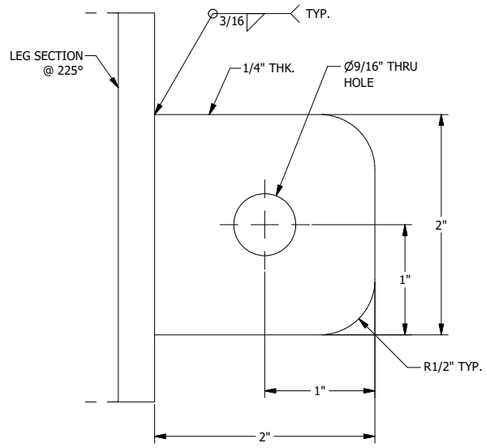

GROUND LUG IS LOCATED @225° LEG SUPPORT
GROUND LUG DETAIL
SCALE 1' = 1'-0"

FC-14

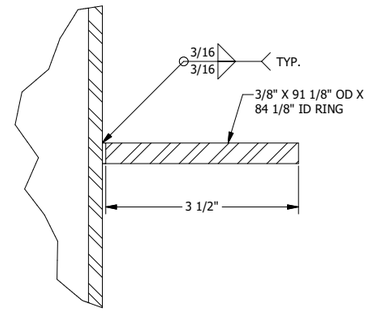

VACUUM RING DETAIL
(2 REQ'D) SCALE 6" = 1'-0"

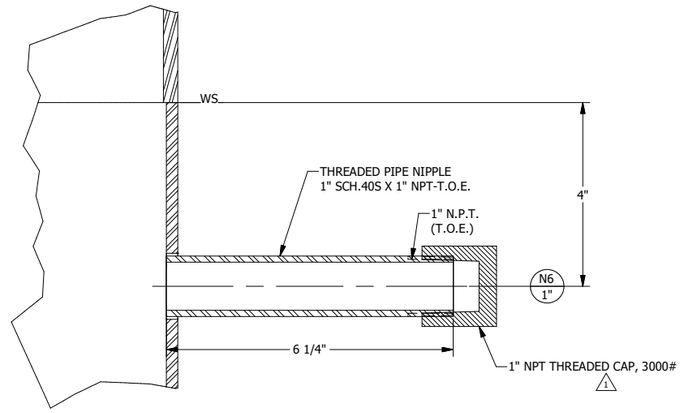

NOZZLE N6 DETAIL
SCALE 5" = 1'-0"

FC-39
FC-38
FC-14

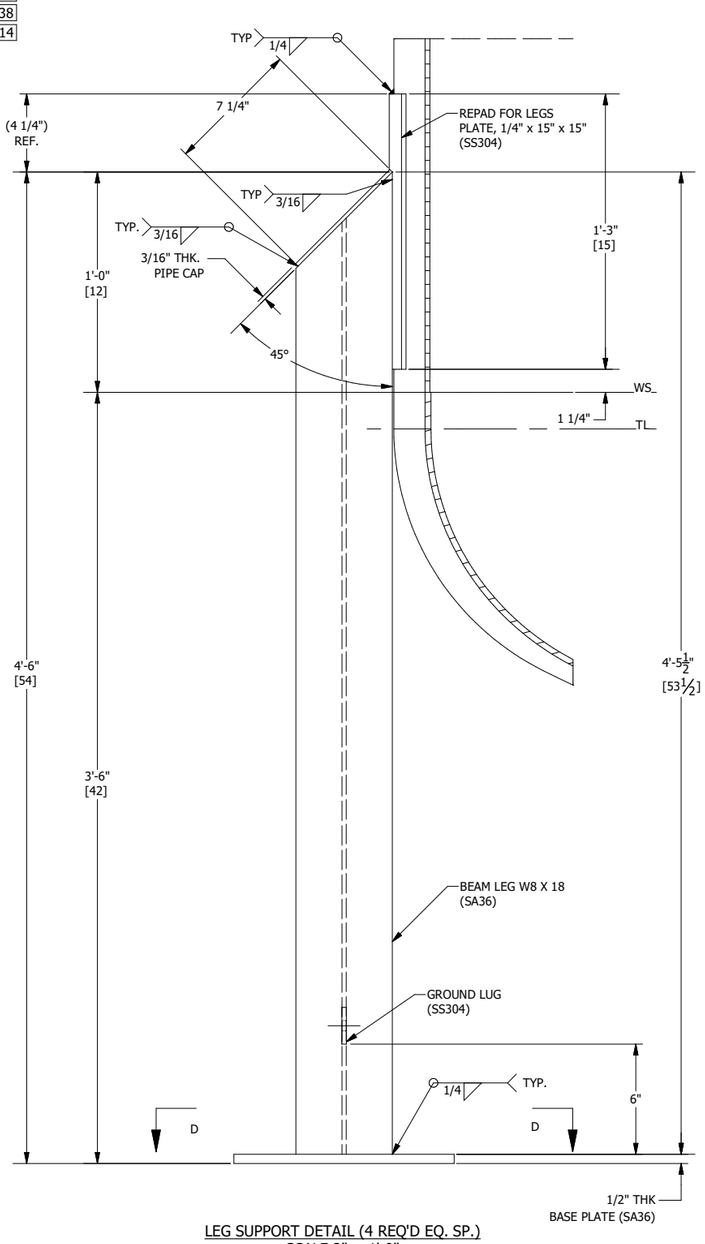

LEG SUPPORT DETAIL (4 REQ'D EQ. SP.)
SCALE 2" = 1'-0"

FC-14

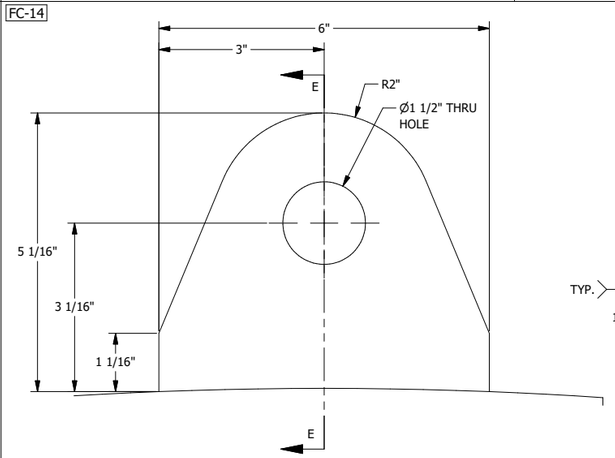

TANK WT. </= 10000#
SHACKLE PIN DIA. = 1"
LIFT LUG DETAIL
(2 REQ'D) SCALE 6" = 1'-0"

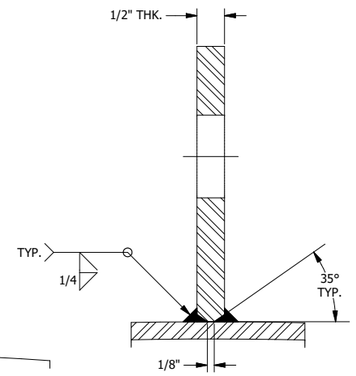

SECTION E-E
SCALE 6" = 1'-0"

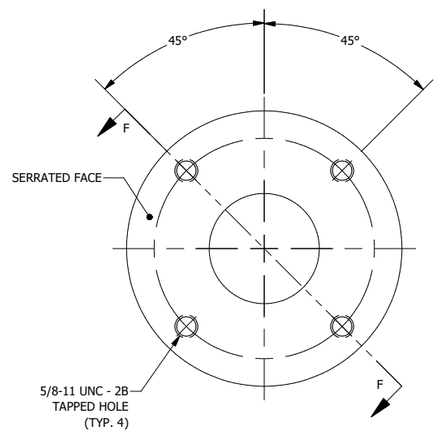

DETAIL OF TYP. FLANGED ADAPTOR NOZZLE N4 & N5
(SS304) (2 REQ'D) SCALE 4" = 1'-0"

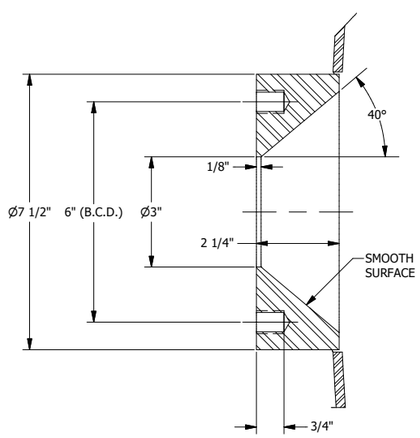

SECTION F-F
SCALE 4" = 1'-0"

REV	D.BY	C.BY	DATE	DESCRIPTION
1	SS	AD	03-24-26	CERTIFIED
0	SS	AD	03-02-26	APPROVAL

REVISIONS

Savannah Tank & Equipment Corp.
1517 Telfair Road, Savannah, GA 31415
(912) 233-8902

DRAWN BY: SS
CHK'D BY: AD
APPROVED BY: HP
SCALE: 6" = 1'-0"

Andritz
Wash Liquor Flash Tank
EQUIP. -
CUST. PO #4504908554

DRAWING NO.: 022-26-2 SHT 2 OF 4 REV. SET 0

FC-14

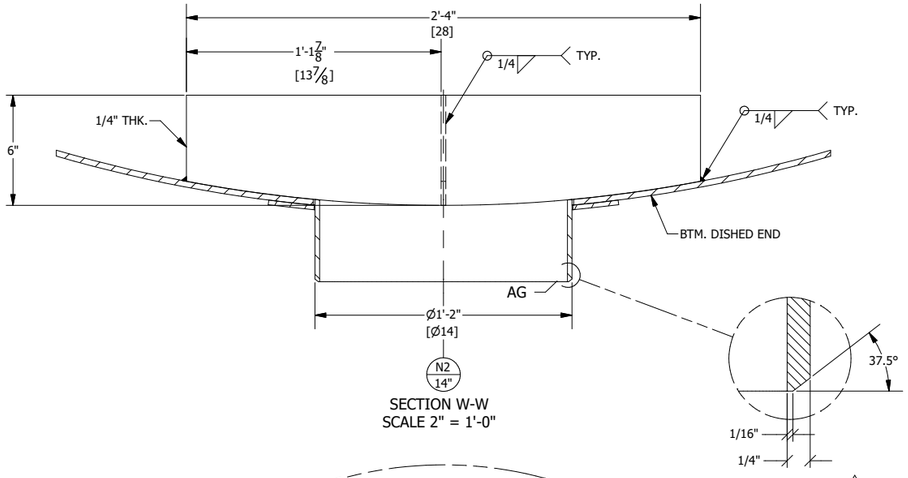

SECTION W-W
SCALE 2" = 1'-0"

DETAIL AG 1
SCALE 10" = 1'-0"

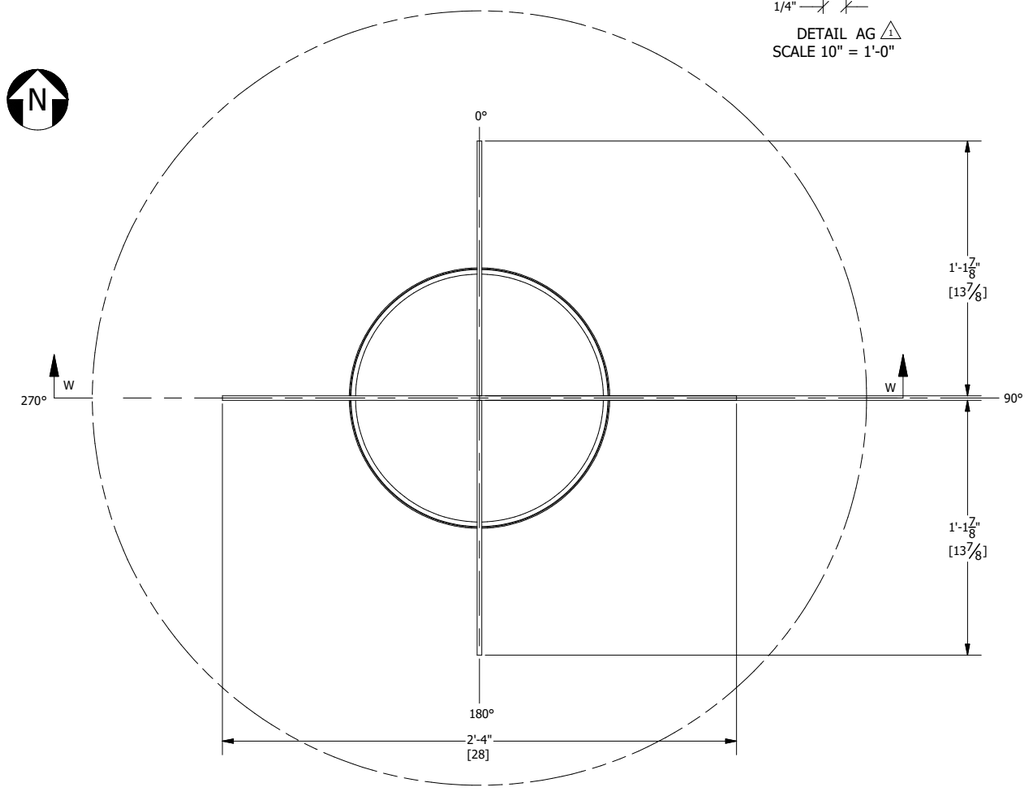

VORTEX BREAKER DETAIL
SCALE 2" = 1'-0"

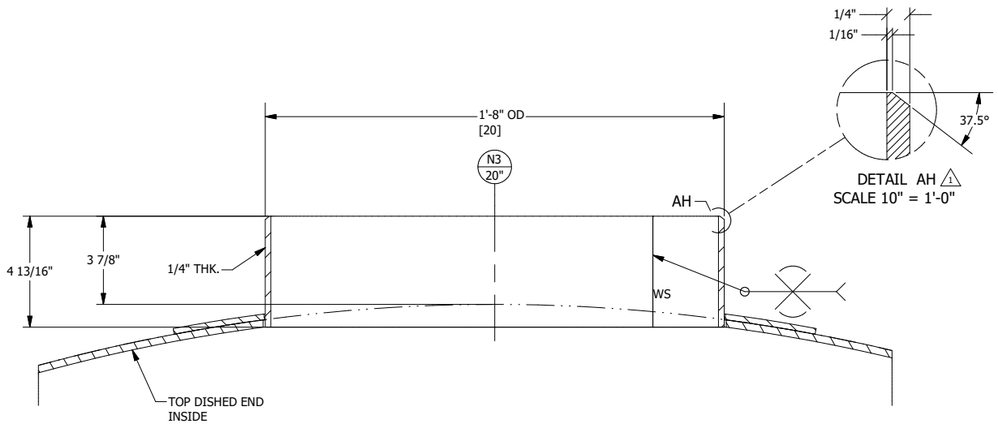

DETAIL AH 1
SCALE 10" = 1'-0"

NOZZLE N3 WELD DETAIL
SCALE 2 1/2" = 1'-0"

FC-14

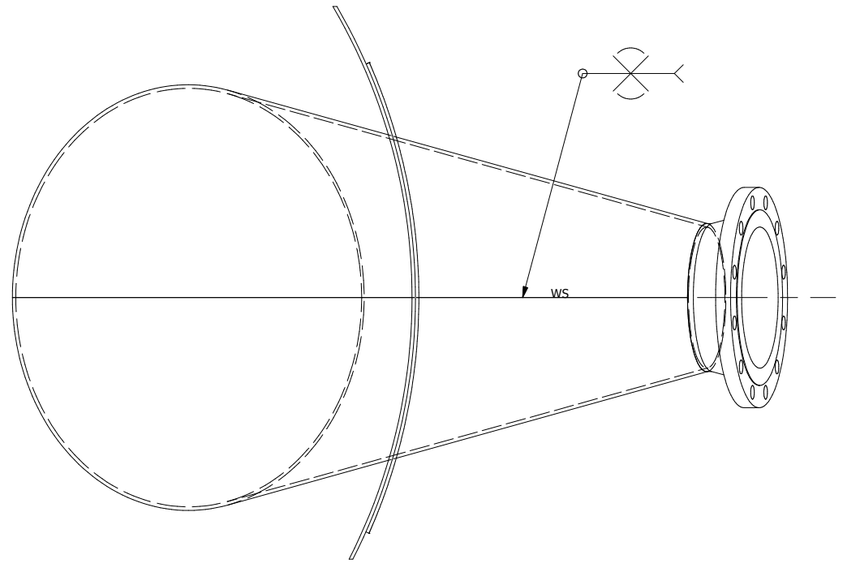

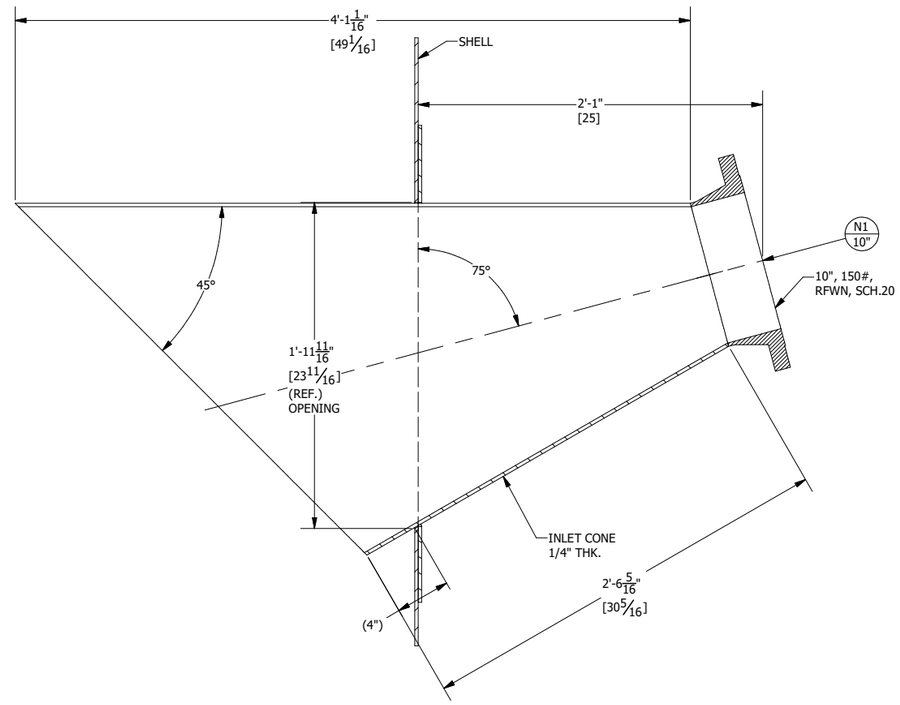

NOZZLE N1 DETAIL
SCALE 1 1/2" = 1'-0"

REV	D.BY	C.BY	DATE	DESCRIPTION
1	SS	AD	03-24-26	CERTIFIED
0	SS	AD	03-02-26	APPROVAL

REVISIONS

Savannah Tank & Equipment Corp.
1517 Telfair Road, Savannah, GA 31415
(912) 233-8902

DRAWN BY: SS
CHK'D BY: AD
APPROVED BY: HP
SCALE: 1 / 30

Andritz
Wash Liquor Flash Tank
EQUIP. –
CUST. PO #4504908554

DRAWING NO.: 022-26-3 SHT 3 OF 4 REV. SET 0

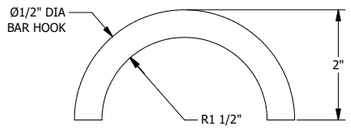

HOOK DETAIL (SS304)
(1 REQ'D) SCALE 6" = 1'-0"

FC-14

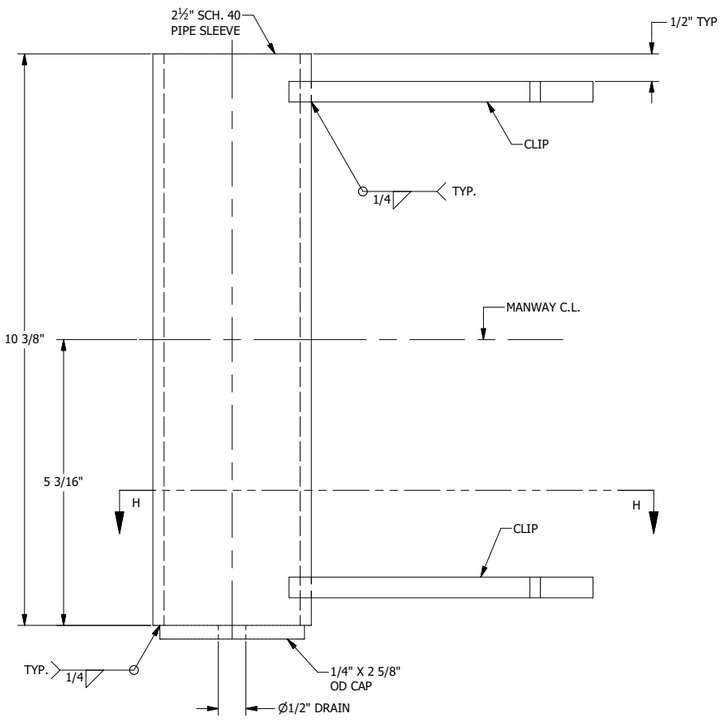

SLEEVE DETAIL (SS304)
DETAIL G
SCALE 6" = 1'-0"

FC-14

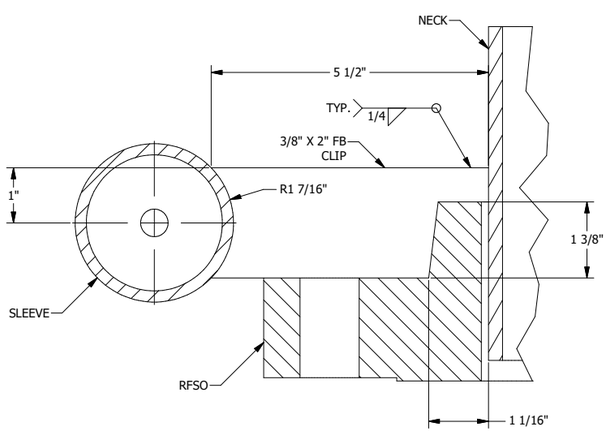

CLIP DETAIL (SS304)
SECTION H-H
(2 REQ'D) SCALE 6" = 1'-0"

FC-14

BOLTING FOR BLIND
(20) 1 1/4-7 NC x 7" FULL THREADED STUD
(40) 1 1/4-7 NC HH NUT
(1) 24" 150# RING GASKET x 1/8" (KLINGER TOP CHEM 2003)
1

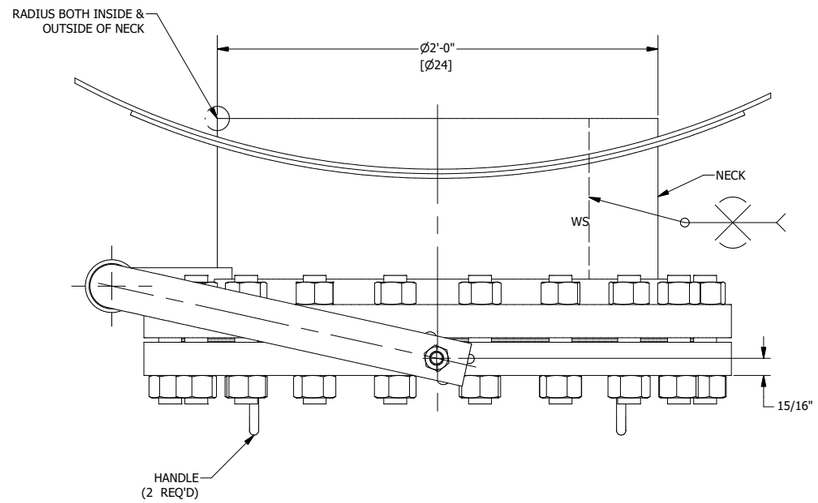

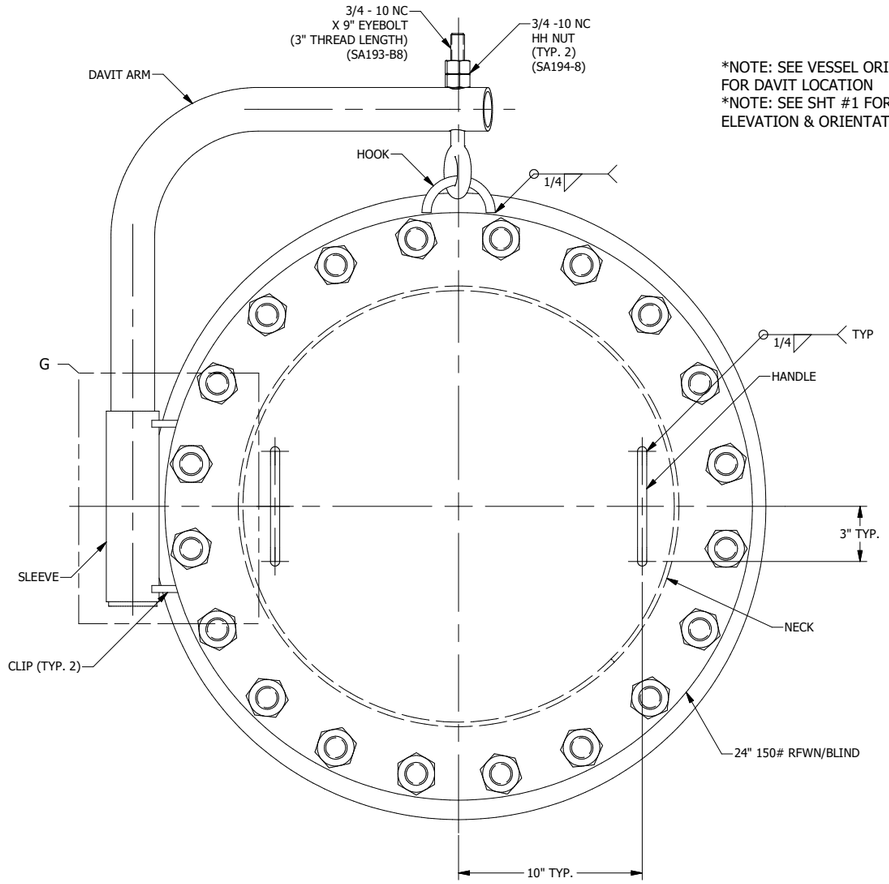

*NOTE: SEE VESSEL ORIENTATION FOR DAVIT LOCATION
*NOTE: SEE SHT #1 FOR MANWAY ELEVATION & ORIENTATION

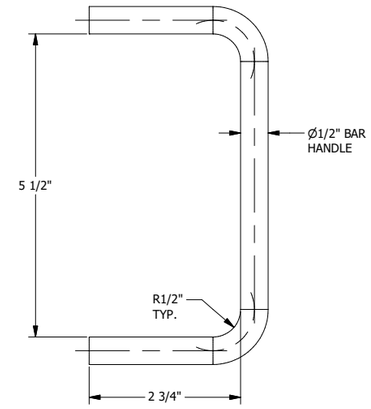

HANDLE DETAIL (SS304)
(2 REQ'D) SCALE 6" = 1'-0"

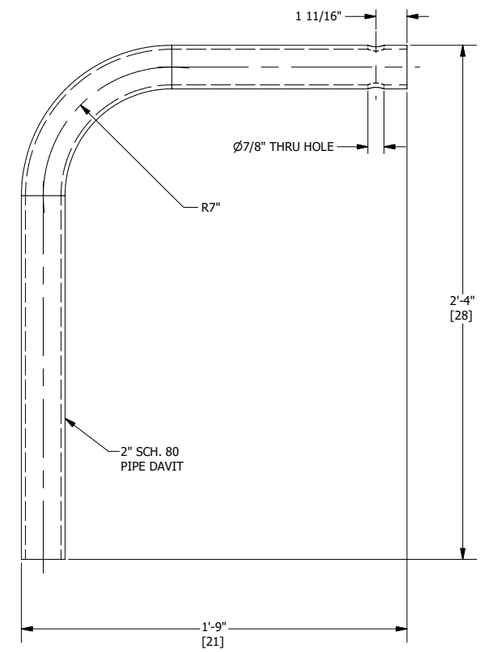

DAVIT ARM DETAIL (SS304)
SCALE 2" = 1'-0"

REV	D.BY	C.BY	DATE	DESCRIPTION
1	SS	AD	03-24-26	CERTIFIED
0	SS	AD	03-02-26	APPROVAL

REVISIONS

Savannah Tank & Equipment Corp.
1517 Telfair Road, Savannah, GA 31415
(912) 233-8902

DRAWN BY: SS
CHK'D BY: AD
APPROVED BY: HP
SCALE: 2" = 1'-0"

Andritz
Wash Liquor Flash Tank
EQUIP. -
CUST. PO #4504908554

DRAWING NO.: 022-26-4 SHT 4 OF 4 REV. SET 0